Bobcat®

High Reach Construction

Telescopic Handlers

The sky's the limit

How can you keep your feet firmly on the ground when you are more than 17 metres up in the air? Whether you're lifting people or material, stability and safety are paramount. Bobcat telescopic handlers offer the stability you need to carry out your tasks with absolute precision. When it comes to Bobcat performance, reliability and versatility, the sky really is the limit!

How high can you go?

Our longest boom can take you or your materials up to 17.4 metres, but we also have telescopic handlers with 12 m and 14 m booms. So there's always a Bobcat telescopic handler to fit your specific needs.

Steady does it

You'll hardly even notice how high up you are in a one-person Bobcat man platform. And if you need more space or more people, we can offer you our man platforms that extend up to 4 m^2. Of course, you have all the safety features you'd expect from a Bobcat machine. You're always in good hands: even when you're 17.4 metres above your site!

Really raise the roof!

Getting heavy or awkward materials up to where you need them can be very inconvenient. But whether it's heavy bricks or hard-to-carry triangular roof beams, your Bobcat telescopic handler can handle the load easily and also safely – thanks to our LSI and AMA safety systems.

At 12, 14 or 17 metres off the ground, Bobcat telescopic handlers deliver best-in-class reach at maximum height while remaining at a safe distance from buildings.

Whatever you need – where you need it!

No matter what material you are shifting, we have an attachment to match the task. When you're raising wood or metal structures and roof beams, our jib helps you reach those otherwise inaccessible areas.

T35120SL
Bobcat

T40170

Get a handle on your lifting work

Construction sites do not often have wide open spaces for moving your building supplies around. Narrow openings, building interiors, upper stories and roofs: getting materials through these confined spaces can be tricky. It's all in a day's work for your Bobcat telescopic handler, though. You'll be amazed at how versatile it can be!

Maximize your space

Your Bobcat telescopic handler can move building materials quickly and safely, even when there is no room to manoeuvre a loader around. And when the job is done, cleaning up the jobsite is a breeze with our angle broom, range of buckets and pallet forks.

Standing still to get the job done

The telescopic handler isn't just handy for lifting things up high! Taking advantage of its long reach, you can move and extend the boom over the surface, while the machine and operator stay in one place and accomplish tasks such as pouring concrete into foundations quickly and easily.

Your Bobcat telescopic advantage

Choose from a selection of telescopic handlers perfectly suited for construction at heights. Each one offers a combination of comfort, performance and safety.

Precise, stable and productive aerial work

• Remote control , available for the man platform.

• Remote control , for precise load placement in confined areas. The remote control allows you to operate the boom and side shift system from outside the cab.

Smooth, user-friendly handling and precision

• Joystick with thumb wheels for proportional auxiliary functions and boom movements.

• Hydrostatic transmission and inching pedal . Pressing the inching pedal will slow down forward movement at any engine speed. It allows state-of-the-art control of auxiliary flow and boom speed.

State-of-the-art lifting safety

- All larger Bobcat telescopic handlers are equipped standard with Longitudinal (LSI) and Lateral Stability Indicator – L models – combined with an Aggravating Movements Arrestor (AMA). When the load approaches the maximum authorised capacity, the red load status indicator lights up.
- Man platforms ready telescopic handlers are equipped standard with a safety group.
- The man platform has an additional weighting system to ensure maximum safety.
- The unique, patented Bobcat side shift system (T40140, T40170) gives you maximum flexibility to laterally place the load when the machine is on stabilizers.

The machine's stability is continuously monitored to ensure your safety during operation.

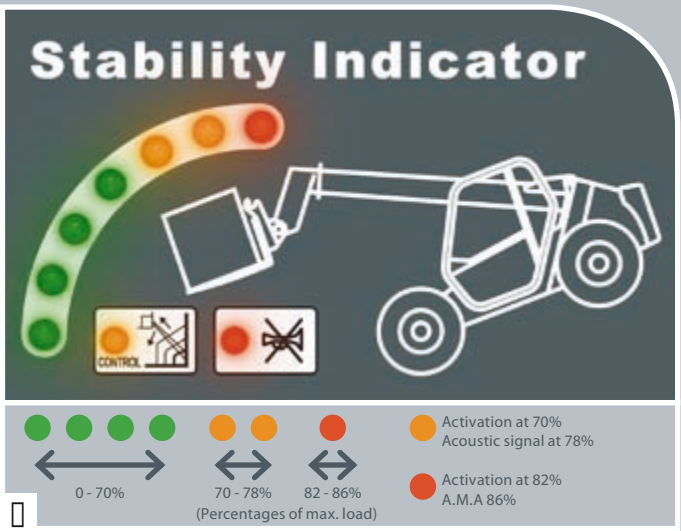

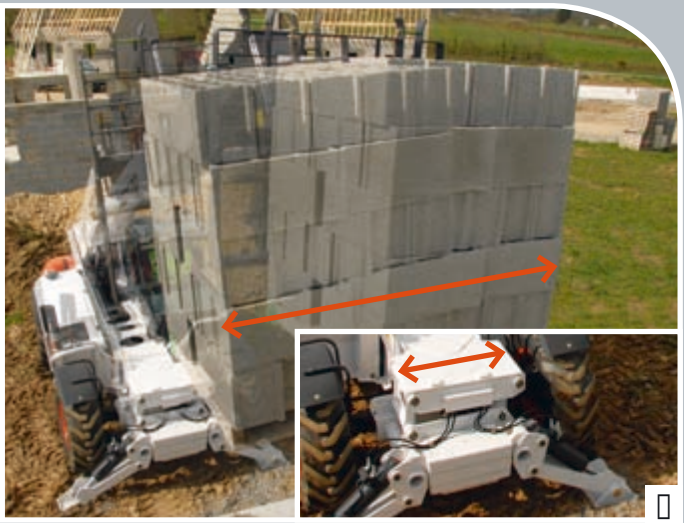

Service back-up and serviceability

- Perkins 1104D-44TA turbo engine
- Extensive dealer network
- Servicing & cleaning is a breeze thanks to easy access to all components and maintenance points.

Comfort, space and visibility

Enjoy a spacious cab with adjustable suspension seat that offers you comfort and an all-round visibility.

Bobcat®

		T35120SL MP	T40140
PERFORMANCE			
Maximum lift capacity	kg	3500	4000
Maximum lift height (on tyres / stabilizers)	mm	11620 / 11850	13430 / 13610
Maximum forward reach (on tyres / stabilizers)	mm	8100 / 8040	9800 / 9700
Lift capacity at full height (on tyres / stabilizers)	kg	2300 / 3200	2500 / 4000
Lift capacity at full reach (on tyres / stabilizers)	kg	350 / 1200	250 / 1300
Crowding force	daN	5600	5000
WEIGHTS			
Weight (unladen)	kg	8160	10000
ENGINE			
Make / Model		PERKINS / 1104D-44TA turbo	PERKINS / 1104D-44TA turbo
Fuel / Cooling		Diesel / Liquid	Diesel / Liquid
Rated power (ISO TR 14396) at 2200 RPM	kW (HP)	74,5 (100)	74,5 (100)
Maximum torque at 1400 RPM	Nm	410	410
Number of cylinders		4	4
Displacement	l	4.4	4.4
TRACTION			
Standard tyres		400/80x24	400/80x24
Low speed (forward / reverse)	km/h	0-7	0-8
High speed (forward / reverse)	km/h	0-30	0-30
Driving modes		Direct drive / soft drive	Direct drive / soft drive
DRIVE SYSTEM			
Transmission		Hydrostatic with electronic regulation	Hydrostatic with electronic regulation
Main drive		2 speed hydrostatic motor	2 speed hydrostatic motor
HYDRAULIC SYSTEM			
Pump type		Gear pump with LS valve	Gear pump with LS valve
Distributor		Flow sharing	Proportional electro-hydraulic
Combined pump capacity	l/min	135	135
Working pressure	bar	265	260
BRAKES			
Service brake		Oil-immersed disc	Oil-immersed disc
Parking and emergency brake		Negative brake with hydraulic command	Negative brake with hydraulic command
DIMENSIONS			
Overall width	mm	2216	2394
Overall length (with carriage)	mm	5584	6099
Overall height	mm	2295	2473
Ground clearance	mm	419	503
Wheelbase	mm	2850	2850
External turning radius (at tyres)	mm	3900	4260
Internal turning radius	mm	1370	1560

T40170

4000
17180 / 17430
13730 / 13670
1250 / 2500
0 / 560
5000

10970

PERKINS / 1104D-44TA turbo
Diesel / Liquid
74,5 (100)
410
4
4.4

400/80x24
0-8
0-30
Direct drive / soft drive

Hydrostatic with electronic regulation
2 speed hydrostatic motor

Gear pump with LS valve
Proportional electro-hydraulic
135
260

Oil-immersed disc
Negative brake with hydraulic command

2394
6210
2473
503
2850
4260
1560

The Bobcat telescopic handler family

A wide range of 12 models from 5 to 17 metres reach to suit all your needs.

All-terrain design for excellent manoeuvrability

Three steering modes to suit your working environment

1. Front-wheel steering for on-road driving
2. All-wheel steering for better on-site handling and smaller turning circles
3. Crab steering for moving loads sideways in restricted areas.

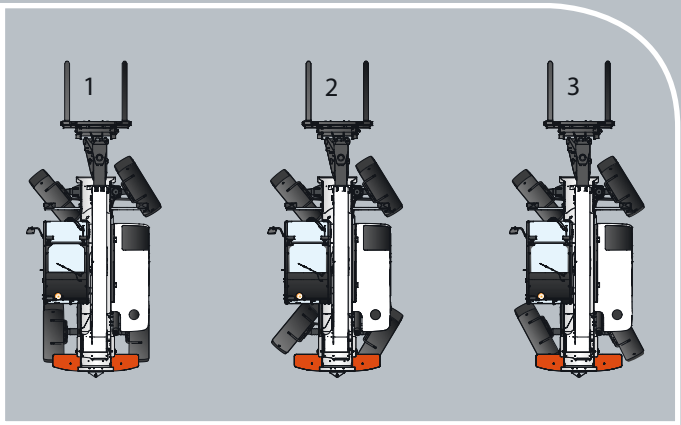

Additional specifications

	Stabilizers and frame levelling	Side shift on stabilizers (mm) - at 50° / at max height	Remote boom control	Man platform application	
				MP Installation	Remote control
T35120 SL	Standard	-	-	-	-
T35120 SL MP	Standard	-	Remote control (optional)	Standard	Optional
T40140	Standard	2050 / 1025	Remote control (optional)	Optional	Optional
T40170	Standard	2800 / 1400	Remote control (optional)	Optional	Optional

Load charts

T35120SL MP: **With forks and DUNLOP 400/80 x 24 156B T37 TL tyres – on stabilizers**

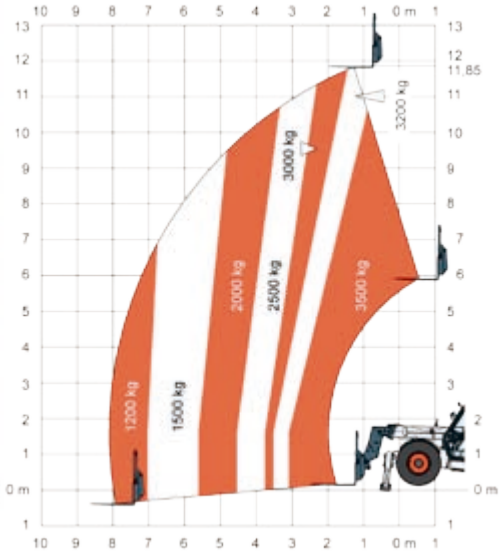

T353120SL MP: **With 2.4 m² man platform – on stabilizers**

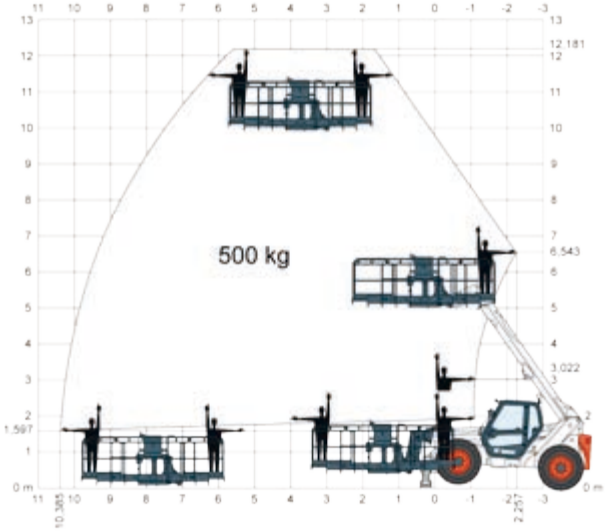

T40140: **With forks and standard 400/80x24 tyres & DUNLOP 400/80x24 156B T37 TL tyres – on stabilizers**

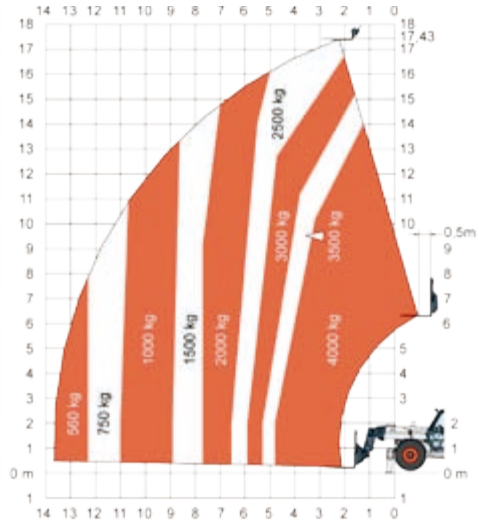

T40140: **With 2.4 m² man platform – on stabilizers**

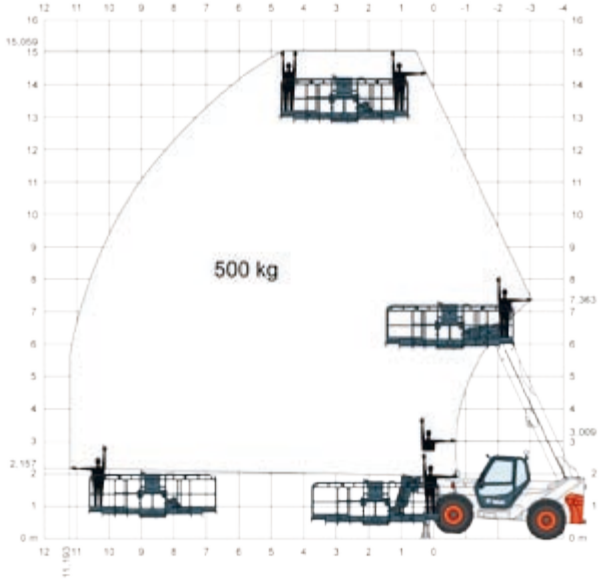

T40170: **With forks and standard 400/80x24 tyres & DUNLOP 400/80x24 156B T37 TL tyres – on stabilizers**

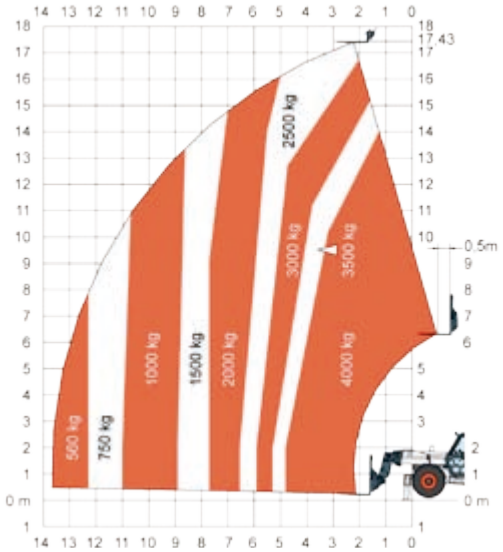

T40170: **With 2.4 m² man platform – on stabilizers**

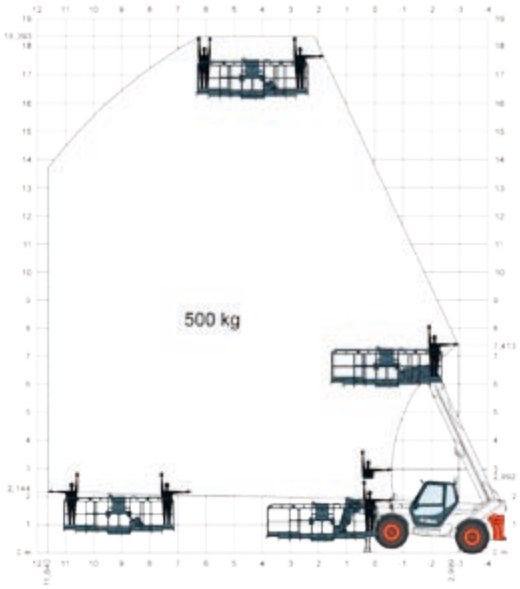

All models comply with stability test EN1459 Annex B.

Options and attachments

	T35120SL MP	T40140	T40170
OPTIONS			
Man platform installation	Standard	X	X
Multifunction remote control	X	X	X
Rotating flashing beacon	X	X	X
Back-up alarm	X	X	X
Protective grill for windscreen	X	X	X
Roof glass wiper	X	X	X
Air conditioning	X	X	X
Boom light	X	X	X
Lockable fuel cap	X	X	X
Loudspeaker installation	X	X	X
2nd Auxiliary hydraulic line on boom	X	X	X
Cold weather starting	X	X	X
Fan inverter	X	X	X
Auto cleaning air prefilter	X	X	X
Cyclonic air prefilter	X	X	X
Tow hitch	X	X	X
Suspension seat	X	X	X
Hydraulic Quick-Tach	X	X	X
Stabilizer locking system	X	X	X

ATTACHMENTS			
Bucket, Digging & Loading	X	X	X
Crane Jib	–	X	X
Extension Jib	X	X	X
Man Platform 1 m	X	X	X
Man Platform 2,4 m extendable to 4 m	X	X	X
Mixing Bucket	X	X	X
Pallet Forks	X	X	X
Winch	X	X	X

Please feel free to contact your local dealer for more information on all options and attachments available.

Ready, set... attach!

With our range of rugged, job-specific attachments, your Bobcat telescopic handler becomes even more versatile and cost effective. High performance, reliability and durability: you know it's a Bobcat machine!

Quick-mounting systems

Our Quick-Tach mounting system is strong and robust, and makes changing attachments on-site a breeze. Whether you choose the manual or hydraulic Quick-Tach version, hooking up and removing attachments is quick, safe and easy.

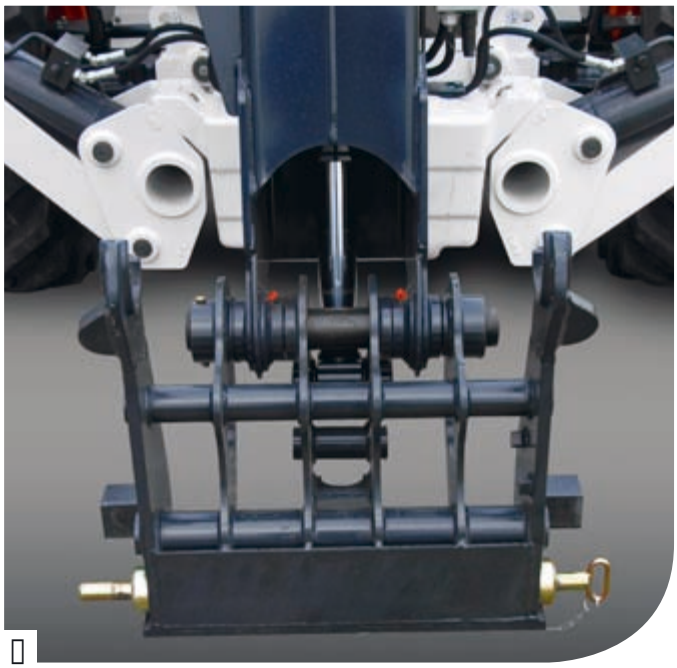

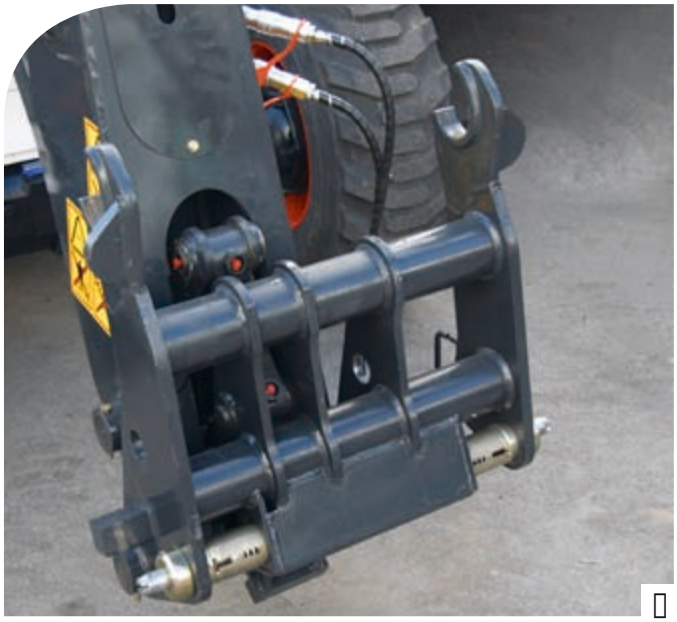

Smooth hydraulic pressure release

Trapped line pressure can really make changing attachments an unpleasant task. With our pressure release system , you can easily release trapped pressure. Attachment changes remain smooth and effortless.

MAN PLATFORM 1M

MAN PLATFORM 4M

CRANE JIB

EXTENSION JIB

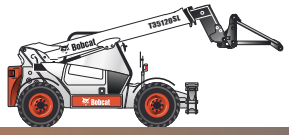

With the 1 m basket, you will be able to access any kind of work space, quickly, easily and safely. Fast & easy to set up, it is made of galvanized steel.

The 4 m platform makes access to work at height simple, quick and safe. Fast and easy to set up, the platform can accommodate several persons. The platform must be used on stabilizers.
It expands from 2.4 m to 4 m in 10 seconds and rotates 90° in both directions.

Add a jib and your telescopic handler becomes a crane, while keeping all the advantages of its mobility and versatility.
Using a jib increases the work area considerably.

The extension jib further increases lift and reach with a hook.
With this attachment, the telescopic handler can position loads in places which are difficult to access by conventional means.

PALLET FORKS

BUCKET, DIGGING & LOADING

MIXING BUCKET

WINCH

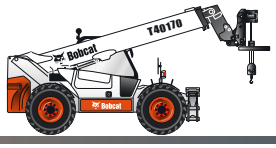

Pallet forks can pick up and place large pallets of construction materials. Whether fixed or floating, pallet forks increase the flexibility of the telescopic handler, and can also be used for removing large bags of debris during clean-up. They are especially handy when travelling on the road.

Tackle the toughest digging and material handling tasks with our robust digging buckets.
They offer good visibility and excellent breakout force for digging and easy bucket filling.
Available in a range of capacities, with or without teeth.

We recommend our mixing bucket if you're involved in maintenance of concrete paving, sewers, kerbs and gutters.

Raise and lower loads without moving the boom. The winch (*) is fitted with a proportional control system for precision load positioning.

(*) Currently for non CE countries only.

Specifications and design are subject to change without notice. – Pictures of Bobcat products may show other than standard equipment.

www.bobcat.eu

FSC Mixed Sources

Bobcat®

©2009 Bobcat EMEA 4472400 EN (03-09)

Bobcat EMEA - Drève Richelle 167 - B-1410 Waterloo, Belgium