JCB MIDI EXCAVATOR | 8080ZTS

MAX. OPERATING WEIGHT	8250kg
NET ENGINE POWER	44kW (58hp)

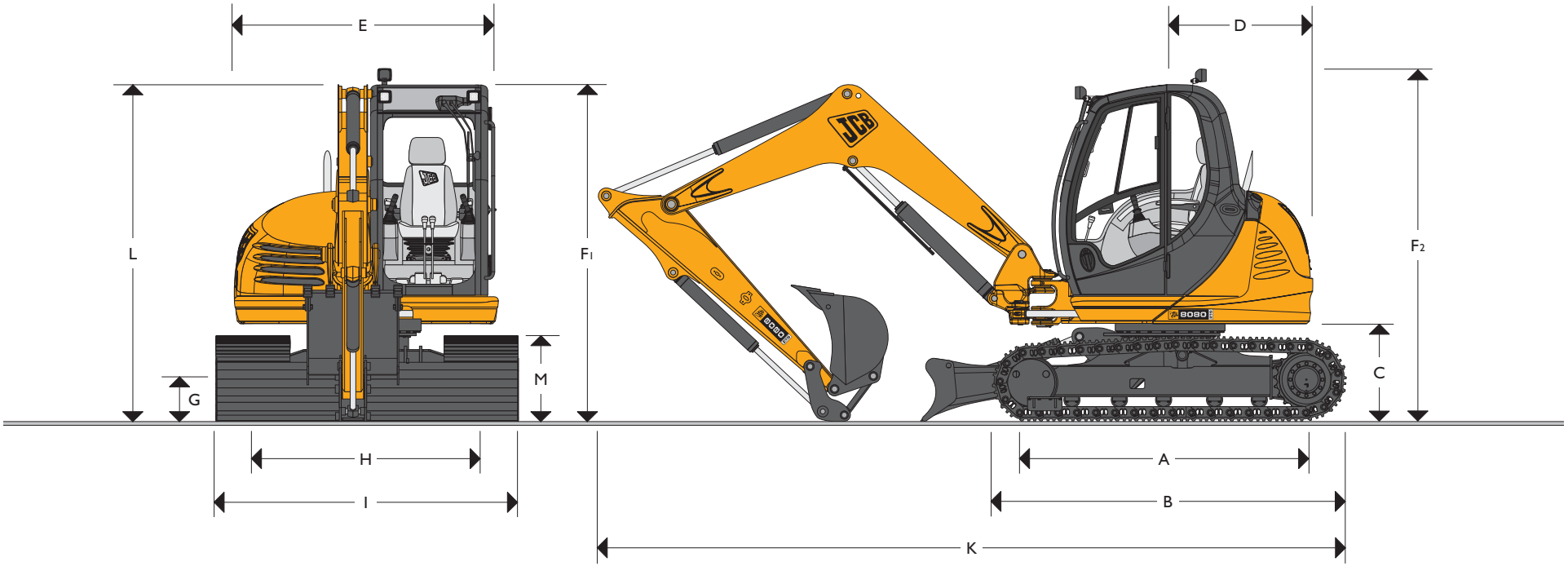

STATIC DIMENSIONS

Dimensions in millimetres (ft-in)		
A	Track length on ground	2200 (7-3)
B	Undercarriage overall length	2830 (9-3)
C	Counterweight clearance	767 (2-6)
D	Tailswing radius	1160 (3-10)
E	Overall width of superstructure	2135 (7-0)
F1	Height over cab	2709 (8-11)
F2	Height over cab worklights	2830 (9-3)
G	Ground clearance	363 (1-2)

Dimensions in millimetres (ft-in)		
H	Track gauge	1850 (6-1)
I	Width over tracks (450mm shoes)	2300 (7-7)
I	Width over tracks (600mm shoes)	2450 (8-0)
I	Width over tracks (450mm offset shoes)	2200 (7-3)
K	Transport length (2000mm dipper)	6060 (19-11)
L	Transport height (2000mm dipper)	2830 (9-3)
M	Track height	665 (2-2)

A Product of Hard Work

ENGINE

Model	4LE2X – Tier III compliant.
Type	Turbo charged, watercooled, 4-cylinder in-line, direct injection diesel.
Nett power (SAE J1349 and 80/1269/EEC)	43kW (57.7hp) @ 2200 rpm.
Piston Displacement	2.18 litres (133 cu.in.).
Air Filtration	Dry element with secondary safety element.
Cooling	Water cooled.
Starting system	12 volt.
Batteries	1 x 12 volt Heavy Duty.
Alternator	12 volt, 80 amp.

SWING SYSTEM

Swing motor	Axial piston type.
Swing brake	Hydraulic braking plus automatic spring applied disc type parking brake.
Final drive	Planetary reduction.
Swing speed	9.5 rev/min.
Swing gear	Large diameter, internally toothed.
Swing lock	Multi position hydraulic.

UNDERCARRIAGE

Construction	Fully welded, 'X' frame type with central bellyguarding and sloping sidemembers with dirt relief holes under top rollers.
Upper & lower rollers	Heat treated, sealed and lubricated.
Track type	Sealed and greased steel or continuous rubber.
Track adjustment	Grease cylinder type.
Track idler	Sealed and lubricated, with spring cushioned recoil.
Track shoes	450mm (18in) triple grouser 600mm (24in) triple grouser 450mm (18in) rubber tracks 450mm (18in) triple grouser offset drive
Rollers and Shoes (each side)	Upper rollers 1 Lower rollers 5 Track shoes 39

HYDRAULIC SYSTEM

A variable flow load sensing system with flow on demand and servo operated, multi-function open centre control.

Pumps

Main pumps	1 variable displacement axial piston type.
Maximum flow	170 l/min (37.4 gal/min).

Control valve

A nine spool control valve with auxiliary service spool as standard (2nd auxiliary optional).

Relief valve settings

Boom/Arm/Bucket	300 bar (4351 lbf/sq.in)
Swing circuit	226 bar (3278lbf/sq.in)
Travel circuit	300 bar (4351lbf/sq.in)
Pilot control	40 bar (580lbf/sq.in)

Hydraulic cylinders

Double acting type, with screwed end caps.

Filtration

The hydraulic components are protected by a high standard of filtration to ensure long hydraulic fluid and component life.

In tank	125 micron.
Main return line	first fit 3 micron, thereafter 10 micron.

Cooling

Air blast cooler.

TRACK DRIVE

Type	Fully hydrostatic, 2 speed with auto shift-down system.
Travel motors	Axial piston type, fully guarded within undercarriage frame.
Final drive	Planetary reduction, bolt-on sprockets.
Service brake	Hydraulic counter balance valve to prevent overspeeding on gradients.
Park brake	Disc type, spring applied, automatic hydraulic release.
Gradeability	49° continuous.
Travel Speed	High – 4.6 km/h. Low – 3.6 km/h.
Tractive Effort	52.9 kN

EXCAVATOR END

Mono boom.
Cast tipping link.
Boom up end damped, dipper out end damped.
Swing end damped both directions.

CAB

Unlike some other zero tailswing machines, the full size high-comfort cab of the 8080 gives the operator the room to operate in comfort, helping him to be more productive.

Dimensions in millimetres (ft-in)	External	Internal
Cab height	1707 (5-7)	1600 (5-3)
Cab length	1510 (4-11)	1405 (4-7)
Cab width	960 (3-2)	945 (3-1)
Distance from seat base to roof	1130 (3-8)	
Door aperture width	735 (2-5)	

- Steel cab with high strength rolled section frame conforms to ISO dimensional standards. Noise and vibration isolated by four hydraulically damped mountings.
- All tinted safety glass windows with fully opening two piece windscreen and in screen stowage. Gas strut assisted. Parallelogram wash/wiper. Opening door window.
- Air conditioning and heater with windscreen demister.
- Fully adjustable deluxe suspension seat with armrests and backrest recline.
- Cigarette lighter and ashtray are standard fitment.
- Radio is available as an option.

AMS – ADVANCED MANAGEMENT SYSTEM

Advanced Management System
The heart of the system is the in-cab monitor unit. This gives a graphical display of fuel level, engine water and hydraulic oil temperatures, in addition to audio visual warnings and function selection.
The unit also controls the work mode and one touch idle facility.
The monitor and service tool can be used to check the function of pressure switches, solenoids and actual values on monitor gauges.
It is easy to amend the preset languages shown on the monitor. Using a service tool additional languages can be made available.
A maintenance indicator illuminates at the required service interval to make the operator aware of an imminent service.
All servicing and basic checks can be carried out using the cab monitor display. A service tool connected to the monitor can be used for more detailed diagnostics and machine history analysis.

CONTROLS

Excavator	All servo lever operated, to ISO control pattern.
Tracks	Individually servo operated by foot pedal or hand lever. Speed selection via button on joystick.
Auxiliary	RH joystick switch or floor switch.
Low flow	RH pedal on floor.
Controls isolation	Gate lock lever at cab entrance, via LH console, and a console mounted switch.
Engine speed	Dial type throttle control plus servo lever mounted one-touch idle control and fascia panel mounted auto-idle control.
Engine stop	Ignition key operated.
Horn	Operated via servo lever mounted button.
Dozer	Via dedicated lever.

SERVICE CAPACITIES

	Litres	UK Gal
Fuel tank	103	22.66
Engine coolant	14.0	3.08
Engine oil	9.6	2.11
Track reduction gear (each side)	1.3	0.29
Hydraulic system	105	23
Hydraulic tank	56.5	12.42

WEIGHTS AND GROUND BEARING PRESSURES

Machine equipped with Boom; 2.00m (6ft 6in) Dipper Arm and 915mm excavating bucket. Operator and full fuel tank.

	Standard Boom	
Track shoes	Operating Weight	Bearing Pressure
450mm (18in.) Rubber	8250kg (18188lb)	0.42kg/sq. cm. (5.97lb/sq. in.)
450mm (18in.) Steel	8400kg (18519lb)	0.42kg/sq. cm. (5.97lb/sq. in.)
600mm (24in.) Steel	8600kg (18960lb)	0.33kg/sq. cm. (4.69lb/sq. in.)

DOZER BLADE

Dimensions in millimetres (ft-in)	
Max. height (above ground)	463 (1-6)
Dig depth (below ground)	403 (1-4)
Approach angle degrees	23°
Width	2320 (7-6), 2470 (8-1), 2220 (7-3)
Height	514 (1-8)
Reach in front of tracks	632 (2-1)

JCB MIDI EXCAVATOR | 8080ZTS

STANDARD EQUIPMENT

Speakers and aerial; Air conditioning; Intermittent wiper; Courtesy light; Automatic idle; Single acting hi flow auxiliary; Cab and boom worklights; Coolbox; Cup holder; Front opening window with integral lower window storage; Auto shiftdown track motors; Floor mounted hammer switch; Suspension seat; Undercarriage belly guards; Cab handrail; Quickhitch electrics; Cold start pre-heat; Double element air cleaner; Heavy duty alternator; Heavy duty battery; Cab and engine soundproofing; Cab heater and screen demister; Tinted glass; Coat hook; Cigarette lighter; Removable floormat; Windscreen wash wipe; Plug in power socket; One touch engine speed control; Dozer blade.

OPTIONAL EQUIPMENT

Fan guard; Electrics isolator; Radio cassette; Low flow auxiliary; Double acting hi flow auxiliary; Mechanical quickhitch; bucket changeover auxiliary; FOGS guard level 1 and 2; Hydraulic quickhitch; Tipping link mounted lifting point; General purpose buckets; Ditch/grading buckets; Hydraulic hammers; Rotating beacon; Electric refuelling pump; Hose burst check valves (either 1 x boom or 1 x boom and 1 x dipper); Headrest.

ZERO TAIL SWING PERFORMANCE

The JCB 8080 midi excavator offers users all the advantages of a zero tailswing machine but none of the drawbacks. When fitted with non-offset tracks, the tail rotates within the width of the undercarriage, reducing the space required in which to operate the machine, ensuring the rear cannot come into contact with objects whilst turning. Also excellent lift capacity has been retained.

A Front slew radius
Kingpost straight – 2862mm (9ft 5in)
Kingpost full swing – 2358mm (7ft 9in)

B Tailswing radius – 1160m (3ft 10in)

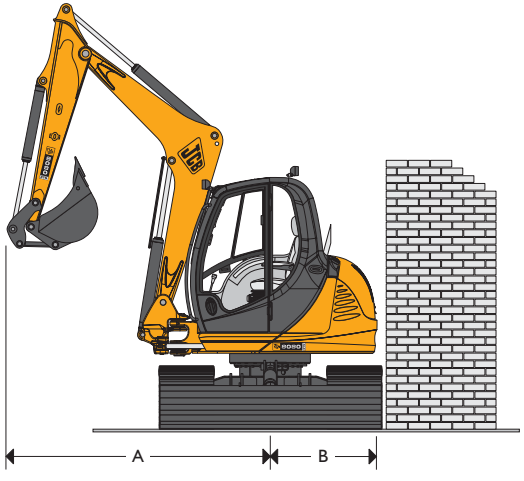

SWING PERFORMANCE

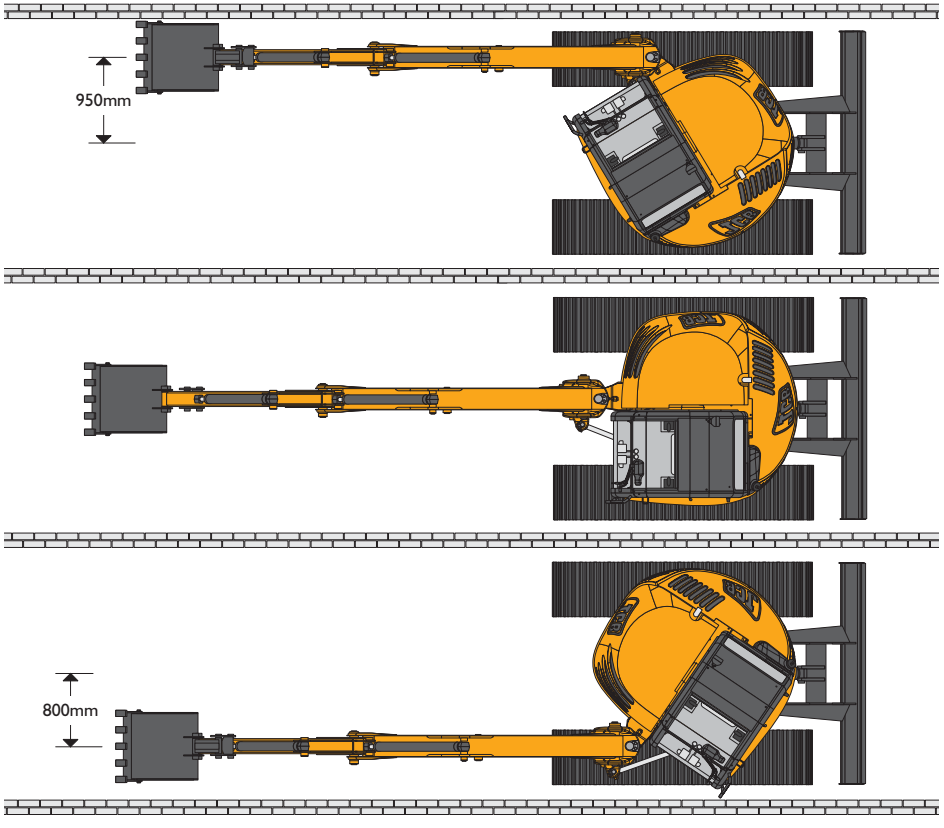

A Product of Hard Work

WORKING RANGE

Standard Boom			
Dimensions			2.00m Dipper
A	Max. digging reach	mm (ft-in)	6836 (22-5)
B	Max. digging reach on ground	mm (ft-in)	6677 (21-11)
C	Max. digging depth	mm (ft-in)	4214 (13-10)
D	Max. digging height	mm (ft-in)	6436 (21-1)
E	Max. dumping height	mm (ft-in)	4703 (15-5)
F	Max. vertical wallcut depth	mm (ft-in)	2752 (9-0)
G	Min. swing radius	mm (ft-in)	2862 (9-5)
	Dipper tearout	kN (lbf)	36 (8093)
	Bucket tearout	kN (lbf)	50 (11240)
	Bucket rotation	degrees	204°

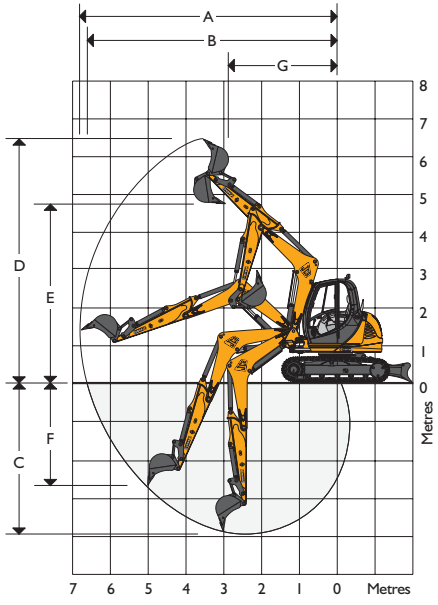

LIFT CAPACITIES – Dipper length: 2.0m, Trackshoes: 450mm rubber, No bucket. **Monoboom**

Load Point	Reach from swing centre											
	3m (9ft 10in)			4m (13ft 1in)			5m (16ft 5in)			5.5m (18ft ½in)		
Height	Dozer up	Dozer down	Dozer down	Dozer up	Dozer down	Dozer down	Dozer up	Dozer down	Dozer down	Dozer up	Dozer down	Dozer down
m (ft-in)	kg	kg	kg	kg	kg	kg	kg	kg	kg	kg	kg	kg
3.5 (11-6)	–	–	–	–	-	-	1182	1523*	1144	-	-	-
3 (9-10)	–	–	–	1513*	1513*	1513*	1173	1575*	1135	1125	1627*	960
2.5 (8-2)	–	–	–	1681	1697*	1613	1157	1662*	1119	1118	1653*	952
2 (6-7)	2523*	2523*	2504	1634	1958*	1567	1135	1757*	1098	1080	1723*	940
1.5 (4-11)	2524	3402*	2378	1583	2279*	1518	1112	1931*	1076	1050	1827*	925
1 (3-3)	2303	3872*	2205	1534	2636*	1471	1089	2071*	1053	1005	1940*	910
0.5 (1-8)	2288	4298*	2078	1523	2915*	1431	1068	2271*	1032	975	2027*	896
Ground Level	2250	4576*	2003	1461	3062*	1401	1051	2314*	1016	938	2071*	885
– 0.5 – (1-8)	2165	4568*	1965	1455	3141*	1381	1039	2349*	1005	900	2114*	880
– 1 – (3-3)	2115	4715*	1890	1430	3132*	1371	1036	2349*	1001	–	–	–

Lift capacity front and rear.

Lift capacity full circle.

Notes:

1. Lifting capacities are based on ISO 10567, that is: 75% of minimum tipping load or 87% of hydraulic lift capacity, whichever is the less. Lifting capacities marked* are based on hydraulic capacity.
2. Lift capacities assume that the machine is on firm, level ground and equipped with an approved lifting point.
3. A bucket must be fitted when lifting, the weight of this bucket must be deducted from the above lift capacities.
4. Lift capacities may be limited by local regulations. Please refer to your dealer.

A GLOBAL COMMITMENT TO QUALITY

JCB's total commitment to its products and customers has helped it grow from a one-man business into Britain's largest privately owned manufacturer of backhoe loaders, crawler excavators, wheeled excavators, telescopic handlers, wheeled loaders, dump trucks, rough terrain fork lifts, industrial fork lifts, mini/midi excavators, skid steer loaders, tractors and compaction equipment.

By making constant and massive investments in the latest production technology, the JCB factories have become some of the most advanced in the world.

By leading the field in innovative research and design, extensive testing and stringent quality control, JCB machines have become renowned all over the world for performance, value and reliability.

And with a global sales and service network of more than 650 dealers and agents, we aim to deliver the best customer support in the industry.

Through setting the standards by which others are judged, JCB has become one of the world's most impressive success stories.

Printed in the UK on paper made from sustainable forests. The pulp used in the manufacture of this paper is made from renewable timber produced on a fully sustainable basis, and is bleached without the use of chlorine gas (ECF – Elemental Chlorine Free). This paper is suitable for recycling.

JCB Sales Limited, Rocester, Staffordshire ST14 5JP. Tel: 01889 590312. Fax: 01889 590588. Web: http://www.jcb.com

JCB reserves the right to change specifications without notice. Illustrations shown may include optional equipment and accessories. The JCB logo is a registered trademark of J C Bamford Excavators Ltd.

9999/4889 3/08 Issue 3

A Product of Hard Work